Ductile iron fittings, accessories

Coupling and flange adaptor

For ductile iron pipe/PE/PVC/steel pipe

Dismantling joint

Saddle for ductile iron/PE/PVC/steel pipe

Ductile iron valves:

BS5163 gate valve/CNS gate valve/Ball valve/Air valve

Weld on flange or screwed on flange

Rose strainer

Pillar hydrant

Manhole cover

Distributed By:
Qingdao Valtech Manufacturing Co.,Ltd
Jihongtan Town,Chengyang District,Qingdao,China

TEL:0086-532-87800276; 0086-13963909290 FAX:0086 -532-87800106
Web Site: http//www.valtechm.com; http//www.valtech.net.cn
E- mail: josenhan@valtechm.com

QINGDAO VALTECH MANUFACTURING CO.,LTD

青岛沃尔特机械有限公司

Content

1.Material Specification....1
2.Hydrostatic Test Pressure....1
3.Thickness of Cement Mortar Lining....1
4.Wall Thickness of Fittings....1
5.Ductile Iron Flanges....2–3
6.D.I. Double Socket 90° Bend....4
7.D.I. Double Socket 45° Bend....4
8. D.I. Double Socket 22 1/2° Bend....5
9. D.I. Double Socket 11 1/4° Bend....5
10.D.I. All Socket Tee....6–7
11.Double Socket Tee with Flanged Branch....7–8
12.Double Socket Taper....9
13.D.I. Flanged Socket....10
14.D.I. All Socket 45° Angle Branch....10–11
15.D.I. Double Socket Level Invert Tee With Flanged Branch (K=14)....11
16.Double Flanged 90° Bend....12
17.Double–Flanged 45° Bend....12
18.Double–Flanged 22 1/2° Bend....13
19.Double Flanged 11 1/4° Bend....14
20.D.I. All Flanged Tee....14
21.D.I. Double Flanged Concenric (Flat) Taper....15–16
22.D.I. Double Flanged 90° Duckfoot Bend....17
23.D.I. Flanged Bell Mouth....17
24.D.I. Flanged Spigot....18
25. D.I. Blank Flange....18
26.D.I. Double Flanged 90° Long Radius Bend....19
27.D.I. K–Collar....19
28.D.I. All Flanged Radial Tee....20
29.D.I. Flanged 45° Angle Branch....20–21
30.D.I. All Flanged Level Invert Tee....21
31.Double Socket 90° Bend For PVC Pipe....22
32.Double Socket 45° Bend For PVC Pipe....22
33.Double Socket 22.5° Bend For PVC Pipe....22
34.Double Socket 11.25° Bend For PVC Pipe....23
35.ALL Socket Tee For PVC Pipe....23
36.Double Socket with Flange Branch For PVC Pipe....24
37.Double Socket Taper For PVC Pipe....25
38.Flange Socket For PVC Pipe....25
39.Flange Spigot For PVC Pipe....26
40.Cap For PVC Pipe....26
41.Loose Flange....27
42.Double Socket Collar For PVC Pipe....27
43.Flange Adapor For PVC Pipe....28
44.Coupling For PVC Pipe....29

VTM D.I. Specification (BS EN545)

Material Specification

Tensile Strength (Min)	420N/mm²
Elongation (Min)	5%
Brinell Hardness	Max 250 HB

Hydrostatic Test Pressure

Nominal Diameter (mm)	Min Test Pressure(bars)
50 to 300	25
350 to 600	16
700 to 1200	10

Thickness of Cement Mortar Lining

Nominal Size DN	Thickness (MM)	
	Nominal Value	Tolerance
50 to 300	4	–1.5
350 to 600	5	–2
700 to 1200	6	–2.5

Wall Thickness of Fittings

Wall thickness (e)	Tolerance
≤7	–2.3
>7	–(2.3+0.001DN)

Nominal Diameter	Wall Thickeness (e)	
DN	K=12	K=14
80	7.0	8.1
100	7.2	8.4
125	7.5	8.8
150	7.8	9.1
200	8.4	9.8
250	9.0	10.5
300	9.6	11.2
350	10.2	11.9
400	10.8	12.6
450	11.4	13.3
500	12.0	14.0
600	13.2	15.4
700	14.4	16.8
800	15.6	18.2
900	16.8	19.6
1000	18.0	21.0
1100	19.2	22.4
1200	20.4	23.8

Dimensions of VTM

Ductile Iron Flanges

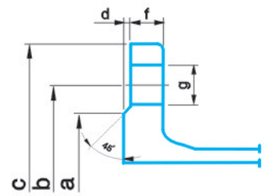

PN 10 Flange

(Unit:mm)

Nominal Diameter	Dimensions					Bolt			Mass(kg)
DN	a	c	f	d	b	Size	g	No .	PN 10
50	99	165	16.0	3	125	M16	19	4	2.2
60	108	175	16.0	3	135	M16	19	4	2.4
65	118	185	16.0	3	145	M16	19	4	2.7
80	132	200	16.0	3	160	M16	19	8	2.9
100	156	220	16.0	3	180	M16	19	8	3.3
125	184	250	16.0	3	210	M16	19	8	4
150	211	285	16.0	3	240	M20	23	8	5.1
200	266	340	17.0	3	295	M20	23	8	7.1
250	319	400	19.0	3	350	M20	23	12	9.9
300	370	455	20.5	4	400	M20	23	12	12.9
350	429	505	20.5	4	460	M20	23	16	14.7
400	480	565	20.5	4	515	M24	28	16	17.7
450	530	615	21.5	4	565	M24	28	20	20.2
500	582	670	22.5	4	620	M24	28	20	24.3
600	682	780	25.0	5	725	M27	31	20	33.7
700	794	895	27.5	5	840	M27	31	24	45
800	901	1015	30.0	5	950	M30	34	24	60
900	1001	1115	32.5	5	1050	M30	34	28	64.3
1000	1112	1230	35.0	5	1160	M33	37	28	81.4
1100	1218	1340	37.5	5	1270	M33	37	32	112.8
1200	1328	1455	40.0	5	1380	M36	41	32	120.9

PN 16 Flange

(Unit:mm)

Nominal Diameter	Dimensions					Bolt			Mass(kg)
DN	a	c	f	d	b	Size	g	No .	PN 16
50	99	165	16.0	3	125	M16	19	4	2.2
60	108	175	16.0	3	135	M16	19	4	2.4
65	118	185	16.0	3	145	M16	19	4	2.7
80	132	200	16.0	3	160	M16	19	8	2.9
100	156	220	16.0	3	180	M16	19	8	3.3
125	184	250	16.0	3	210	M16	19	8	4
150	211	285	16.0	3	240	M20	23	8	5.1
200	266	340	17.0	3	295	M20	23	12	6.9
250	319	400	19.0	3	355	M24	28	12	9.6
300	370	455	20.5	4	410	M24	28	12	12.6
350	429	520	22.5	4	470	M24	28	16	17.4
400	480	580	24.0	4	525	M27	31	16	22.2
450	548	640	26.0	4	585	M27	31	20	28.1

QINGDAO VALTECH MANUFACTURING CO.,LTD
青岛沃尔特机械有限公司

PN 16 Flange

(Unit:mm)

Nominal Diameter	Dimensions					Bolt			Mass(kg)
DN	a	c	f	d	b	Size	g	No .	PN 16
500	609	715	27.5	4	650	M30	34	20	37.7
600	720	840	31.0	5	770	M33	37	20	57.4
700	794	910	34.5	5	840	M33	37	24	69
800	901	1025	38.0	5	950	M36	41	24	74
900	1001	1125	41.5	5	1050	M36	41	28	88.2
1000	1112	1255	45.0	5	1170	M39	44	28	122.9
1100	1218	1355	48.5	5	1270	M39	44	32	147.8
1200	1328	1485	52.0	5	1390	M45	50	32	185.2

PN 25 Flange

(Unit:mm)

Nominal Diameter	Dimensions					Bolt			Mass(kg)
DN	a	c	f	d	b	Size	g	No .	PN 25
50	99	165	16.0	3	125	M16	19	4	2.2
60	108	175	16.0	3	135	M16	19	8	2.3
65	118	185	16.0	3	145	M16	19	8	2.6
80	132	200	16.0	3	160	M16	19	8	2.9
100	156	235	16.0	3	190	M20	23	8	3.8
125	184	270	16.0	3	220	M24	28	8	4.6
150	211	300	17.0	3	250	M24	28	8	6.1
200	274	360	19.0	3	310	M24	28	12	8.9
250	330	425	21.5	3	370	M27	31	12	13.2
300	389	485	23.5	4	430	M27	31	12	18
350	448	555	26.0	4	490	M30	34	16	25.3
400	503	620	28.0	4	550	M33	37	16	33.2
450	548	670	30.5	4	600	M33	37	20	39
500	609	730	32.5	4	660	M33	37	20	48.3
600	720	845	37.0	5	770	M36	41	20	69.8
700	820	960	41.5	5	875	M39	44	24	89
800	928	1085	46.0	5	990	M45	50	24	122
900	1028	1185	50.5	5	1090	M45	50	28	148.6
1000	1140	1320	55.0	5	1210	M52	57	28	200.7
1100	1240	1420	59.5	5	1310	M52	57	32	263.6
1200	1350	1530	64.0	5	1420	M52	57	32	284.7

VTM Ductile Iron Pipe Fittings

VTM D.I. Double Socket 90° Bend(K=12) T-type

(Unit:mm)

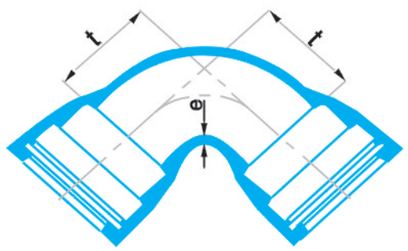

Nominal Diameter DN	t Series A	t Series B	e	Mass(kg)
80	100	85	7	8.6
100	120	100	7.2	11.4
125	145	115	7.5	15.7
150	170	130	7.8	20.5
200	220	160	8.4	33
250	270	240	9	48.5
300	320	280	9.6	68
350	370	/	10.2	97.5
400	420	/	10.8	124
450	470	/	11.4	156
500	520	/	12	193
600	620	/	13.2	280
700	720	/	14.4	455
800	820	/	15.6	605
900	920	/	16.8	813
1000	1020	/	18	1045
1100	1120	/	19.2	1252.6
1200	1220	/	20.4	1663

VTM D.I. Double Socket 45° Bend(K=12) T-type

(Unit:mm)

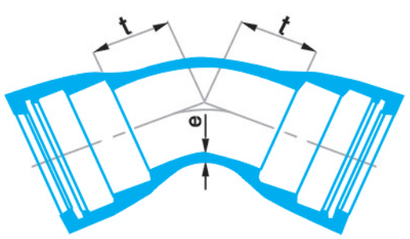

Nominal Diameter DN	t Series A	t Series B	e	Mass(kg)
80	55	50	7	7.7
100	65	60	7.2	10.1
125	75	65	7.5	13.6
150	85	70	7.8	17.4
200	110	80	8.4	27
250	130	135	9	38.5
300	150	155	9.6	53
350	175	170	10.2	70
400	195	185	10.8	89
450	220	200	11.4	117
500	240	/	12	139
600	285	/	13.2	202
700	330	/	14.4	282
800	370	/	15.6	378
900	415	/	16.8	496
1000	460	/	18	635
1100	505	/	19.2	855.5
1200	550	/	20.4	986

QINGDAO VALTECH MANUFACTURING CO.,LTD
青岛沃尔特机械有限公司

VTM Ductile Iron Pipe Fittings

VTM D.I. Double Socket 22 1/2° Bend(K=12) T-type

(Unit:mm)

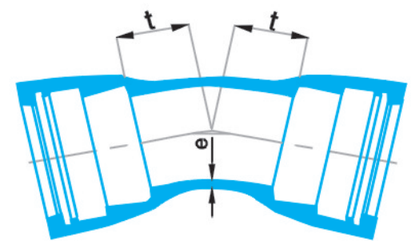

Nominal Diameter DN	t Series A	t Series B	e	Mass(kg)
80	40	40	7	7.3
100	40	50	7.2	9.3
125	50	55	7.5	12.6
150	55	60	7.8	15.9
200	65	70	8.4	24
250	75	80	9	33.5
300	85	90	9.6	44.5
350	95	100	10.2	58
400	110	110	10.8	74
450	120	120	11.4	95
500	130	/	12	111
600	150	/	13.2	157
700	175	/	14.4	217
800	195	/	15.6	287
900	220	/	16.8	373
1000	240	/	18	470
1100	260	/	19.2	643.7
1200	285	/	20.4	716

VTM D.I. Double Socket 11 1/4° Bend(K=12) T-type

(Unit:mm)

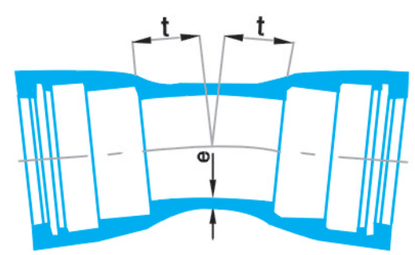

Nominal Diameter DN	t Series A	t Series B	e	Mass(kg)
80	30	30	7.0	7.1
100	30	30	7.2	8.9
125	35	35	7.5	11.9
150	35	40	7.8	14.8
200	40	45	8.4	22
250	50	55	9.0	30.5
300	55	55	9.6	40.5
350	60	60	10.2	52
400	65	65	10.8	65
450	70	70	11.4	83.5
500	75	/	12.0	96
600	85	/	13.2	134
700	95	/	14.4	181
800	110	/	15.6	239
900	120	/	16.8	305
1000	130	/	18.0	381
1100	140	/	19.2	525.4
1200	150	/	20.4	568

VTM D.I. All Socket Tee
(K=14)
T-type

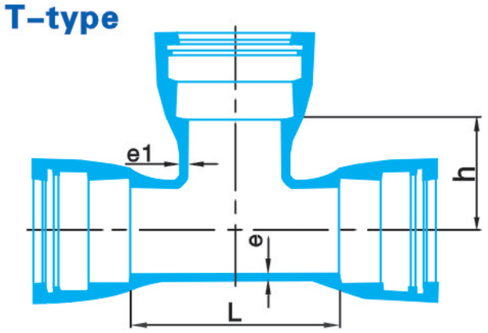

(Unit:mm)

Nominal Diameter		L		h		e	e1	Mass(kg)
DN	dn	Series A	Series B	Series A	Series B			
80	80	170	175	85	85	8.1	8.1	12.4
100	80	170	165	95	90	8.4	8.1	14.8
100	100	190	195	95	100	8.4	8.4	16.1
125	80	170	175	105	105	8.8	8.1	18
125	100	195	195	110	115	8.8	8.4	19.8
125	125	225	225	110	115	8.8	8.8	22
150	80	170	180	120	120	9.1	8.1	21.5
150	100	195	200	120	125	9.1	8.4	23.5
150	150	255	260	125	130	9.1	9.1	28
200	80	175	180	145	145	9.8	8.1	30
200	100	200	200	145	150	9.8	8.4	32
200	150	255	260	150	155	9.8	9.1	37
200	200	315	320	155	160	9.8	9.8	43
250	80	180	185	170	185	10.5	8.1	47.5
250	100	200	205	170	190	10.5	8.4	47.5
250	150	260	265	175	190	10.5	9.1	59
250	200	315	320	180	190	10.5	9.8	63.5
250	250	375	380	190	190	10.5	10.5	71.5
300	100	205	210	195	220	11.2	8.4	54.5
300	150	260	265	200	220	11.2	9.1	68
300	200	320	325	205	220	11.2	9.8	72
300	250	375	380	210	220	11.2	10.5	90.5
300	300	435	440	220	220	11.2	11.2	90.5
350	100	205	/	260	/	11.9	8.4	70.5
350	150	325	/	270	/	11.9	9.1	86.5
350	200	325	/	270	/	11.9	9.8	90.5
350	300	440	/	285	/	11.9	11.2	111
350	350	495	/	290	/	11.9	11.9	124

Nominal Diameter		L		h		e	e1	Mass(kg)
DN	dn	Series A	Series B	Series A	Series B			
400	100	210	/	285	/	12.6	8.4	83
400	150	325	/	295	/	12.6	9.1	101
400	200	325	/	295	/	12.6	9.8	105
400	300	440	/	310	/	12.6	11.2	127
400	400	560	/	320	/	12.6	12.6	155
450	150	330	/	320	/	13.3	9.1	117
450	200	330	/	320	/	13.3	10.5	121
450	300	445	/	335	/	13.3	11.2	146
450	400	560	/	345	/	13.3	12.6	175
450	450	620	/	350	/	13.3	13.3	190
500	150	330	/	345	/	14.0	9.1	135
500	200	330	/	345	/	14.0	9.8	139
500	300	450	/	360	/	14.0	11.2	167
500	400	565	/	370	/	14.0	12.6	198
500	500	680	/	380	/	14.0	14.0	231
600	150	340	/	395	/	15.4	9.1	175
600	200	340	/	395	/	15.4	9.8	178
600	300	455	/	410	/	15.4	11.2	211
600	400	570	/	420	/	15.4	12.6	248
600	600	800	/	440	/	15.4	15.4	325
700	150	360	/	410	/	16.8	9.1	288
700	200	345	/	445	/	16.8	9.8	289
700	300	460	/	460	/	16.8	11.2	326
700	400	575	/	470	/	16.8	12.6	361
700	450	640	/	435	/	16.8	13.3	381
700	600	810	/	490	/	16.8	15.4	461
700	700	925	/	500	/	16.8	16.8	536
800	150	360	/	465	/	18.2	9.1	352
800	200	350	/	495	/	18.2	9.8	353
800	300	465	/	510	/	18.2	11.2	399
800	400	580	/	520	/	18.2	12.6	439
800	450	645	/	490	/	18.2	13.3	463
800	600	1045	/	540	/	18.2	15.4	629
800	800	1045	/	565	/	18.2	18.2	701
900	200	355	/	545	/	19.6	9.8	458
900	400	590	/	570	/	19.6	12.6	556
900	600	1170	/	590	/	19.6	15.4	833
900	800	1170	/	615	/	19.6	18.2	903
900	900	1170	/	625	/	19.6	19.6	944
1000	200	360	/	595	/	21.0	9.8	557
1000	400	595	/	620	/	21.0	12.6	672
1000	600	1290	/	640	/	21.0	15.4	1008
1000	800	1290	/	665	/	21.0	18.2	1129
1000	1000	1290	/	685	/	21.0	21.0	1209
1100	400	600	/	670	/	22.4	12.6	908.8

QINGDAO VALTECH MANUFACTURING CO.,LTD
青岛沃尔特机械有限公司

VTM D.I. All Socket Tee
(K=14)
T-type

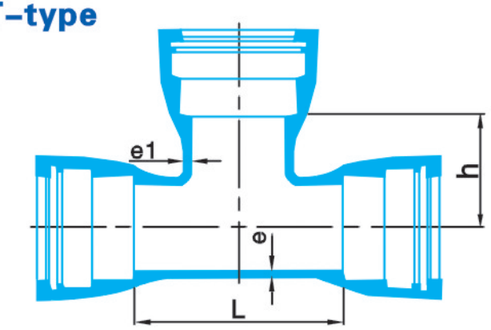

Nominal Diameter		L		h		e	e1	Mass(kg)
DN	dn	Series A	Series B	Series A	Series B			
1100	600	830	/	690	/	22.4	15.4	1051.8
1100	800	1065	/	715	/	22.4	18.2	1312.8
1100	1000	1295	/	735	/	22.4	21.0	1503.8
1100	1100	1410	/	745	/	22.4	22.4	1625.8
1200	400	605	/	720	/	23.8	12.6	978
1200	600	840	/	740	/	23.8	15.4	1139
1200	800	1070	/	765	/	23.8	18.2	1449
1200	1000	1300	/	785	/	23.8	21.0	1657
1200	1200	1535	/	805	/	23.8	23.8	1900

VTM D.I.
Double Socket Tee
with Flanged Branch
(K=14)
T-type

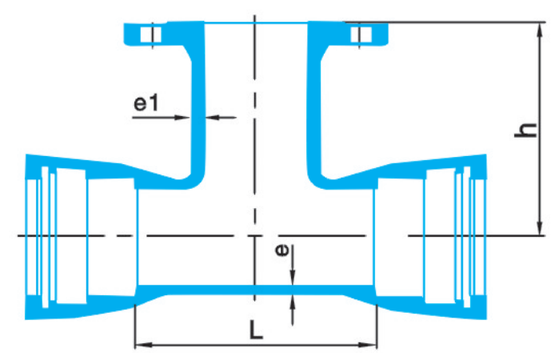

(Unit:mm)

Nominal Diameter		L		h		e	e1	Mass(kg)
DN	dn	Series A	Series B	Series A	Series B			
80	80	170	175	165	165	8.1	8.1	13.5
100	80	170	165	175	170	8.4	8.1	15.8
100	100	190	195	180	180	8.4	8.4	17.2
125	80	170	175	190	185	8.8	8.1	19.4
125	100	195	195	195	195	8.8	8.4	21
125	125	225	225	200	200	8.8	8.8	23
150	80	170	180	205	200	9.1	8.1	23
150	100	195	200	210	205	9.1	8.4	24.5
150	150	255	260	220	220	9.1	9.1	29.5
200	80	175	180	235	225	9.8	8.1	31.5
200	100	200	200	240	230	9.8	8.4	33.5
200	150	255	260	250	245	9.8	9.1	39
200	200	315	320	260	260	9.8	9.8	46
250	80	180	180	265	265	10.5	8.1	47
250	100	200	205	270	270	10.5	8.4	43.5
250	150	260	265	280	280	10.5	9.1	59
250	200	315	320	290	290	10.5	9.8	57
250	250	375	380	300	300	10.5	10.5	66
300	80	180	185	295	295	11.2	8.1	55
300	100	205	210	300	300	11.2	8.4	55
300	150	260	265	310	310	11.2	9.1	68.5
300	200	320	325	320	320	11.2	9.8	70
300	250	/	380	/	330	11.2	10.5	91
300	300	435	440	340	340	11.2	11.2	91
350	80	205	185	330	325	11.9	8.1	70.5
350	100	205	210	330	330	11.9	8.4	68
350	150	325	270	350	340	11.9	9.1	87.5
350	200	325	325	350	350	11.9	9.8	86

VTM D.I.

Double Socket Tee with Flanged Branch (K=14) T-type

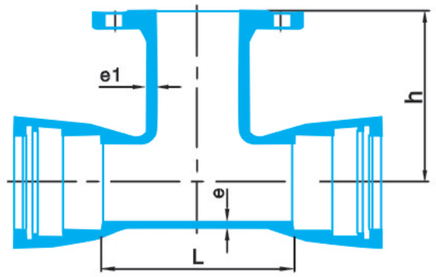

(Unit:mm)

Nominal Diameter		L		h		e	e1	Mass(kg)
DN	dn	Series A	Series B	Series A	Series B			
350	300	440	/	370	/	11.9	11.2	113
350	350	495	500	380	380	11.9	11.9	120
400	80	185	190	355	355	12.6	8.1	83
400	100	210	210	360	360	12.6	8.4	83
400	150	270	270	370	370	12.6	9.1	102
400	200	325	330	380	380	12.6	9.8	102
400	250	/	385	/	390	12.6	10.5	110
400	300	440	445	400	400	12.6	11.2	129
400	400	560	560	420	420	12.6	12.6	156
450	80	215	/	395	/	13.3	8.1	97.5
450	100	215	215	395	390	13.3	8.4	98.5
450	150	330	270	410	400	13.3	9.1	119
450	200	330	330	410	410	13.3	10.5	122
450	300	445	445	430	430	13.3	11.2	149
450	400	560	560	450	450	13.3	12.6	181
450	450	620	620	460	460	13.3	13.3	200
500	80	215	/	420	/	14.0	8.1	113
500	100	215	/	420	/	14.0	8.4	116
500	150	330	/	440	/	14.0	9.1	137
500	200	330	/	440	/	14.0	9.8	141
500	300	450	/	460	/	14.0	11.2	171
500	400	565	/	480	/	14.0	12.6	205
500	500	680	/	500	/	14.0	14.0	247
600	80	220	/	480	/	15.4	8.1	145
600	100	220	/	480	/	15.4	8.4	146
600	150	340	/	500	/	15.4	9.1	177
600	200	340	/	500	/	15.4	9.8	189
600	300	455	/	520	/	15.4	11.2	216
600	400	570	/	540	/	15.4	12.6	263
600	600	800	/	580	/	15.4	15.4	366
700	100	345	/	525	/	16.8	8.4	278
700	150	345	/	525	/	16.8	9.1	292
700	200	345	/	525	/	16.8	9.8	242
700	400	575	/	555	/	16.8	12.6	325

(Unit:mm)

Nominal Diameter		L		h		e	e1	Mass(kg)
DN	dn	Series A	Series B	Series A	Series B			
700	600	810	/	585	/	16.8	15.4	518
700	700	925	/	600	/	16.8	16.8	475
800	100	350	/	585	/	18.2	8.4	337
800	150	350	/	585	/	18.2	9.1	356
800	200	350	/	585	/	18.2	9.8	306
800	400	580	/	615	/	18.2	12.6	403
800	450	645	/	630	/	18.2	13.3	483
800	600	1045	/	645	/	18.2	15. 4	605
800	800	1045	/	675	/	18.2	18.2	642
900	150	355	/	645	/	19.6	9.1	475
900	200	355	/	645	/	19.6	9.8	379
900	400	590	/	675	/	19.6	12.6	495
900	600	1170	/	705	/	19.6	15.4	774
900	800	1170	/	735	/	19.6	18.2	936
900	900	1170	/	750	/	19.6	19.6	838
1000	150	360	/	705	/	21.0	9.1	560
1000	200	360	/	705	/	21.0	9.8	462
1000	400	595	/	735	/	21.0	12.6	596
1000	600	1290	/	765	/	21.0	15.4	973
1000	800	1290	/	795	/	21.0	18.2	1178
1000	1000	1290	/	825	/	21.0	21.0	1086
1100	200	370	/	765	/	22.4	9.8	781.8
1100	400	600	/	795	/	22.4	12.6	933.8
1100	600	830	/	825	/	22.4	15.4	1102.8
1100	800	1065	/	855	/	22.4	18.2	1334.8
1100	1000	1295	/	885	/	22.4	21.0	1594.8
1100	1100	1410	/	900	/	22.4	22.4	1713.8
1200	200	375	/	825	/	23.8	9.8	841
1200	400	605	/	855	/	23.8	12.6	1010
1200	600	840	/	885	/	23.8	15.4	1027
1200	800	1070	/	915	/	23.8	18.2	1210
1200	1000	1300	/	945	/	23.8	21.0	1448
1200	1200	1535	/	975	/	23.8	23.8	2018

VTM D.I.

Double Socket Taper (K=12) T-type

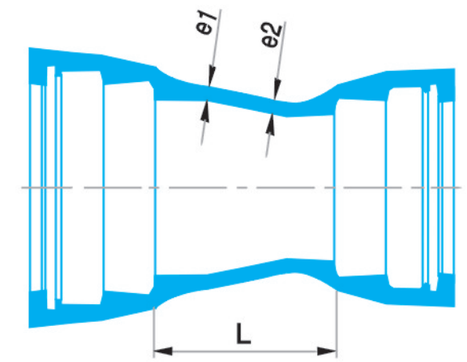

(Unit:mm)

Nominal Diameter		L		e1	e2	Mass(kg)
DN	dn	Series A	Series B			
100	80	90	85	7.2	7.0	9.2
125	80	140	135	7.5	7.0	10.8
125	100	100	120	7.5	7.2	11.1
150	80	190	190	7.8	7.0	14.9
150	100	150	150	7.8	7.2	15.3
150	125	100	115	7.8	7.5	14.1
200	100	250	250	8.4	7.2	23.5
200	125	200	230	8.4	7.5	20.5
200	150	150	145	8.4	7.8	24
250	125	300	335	9.0	7.5	29
250	150	250	250	9.0	7.8	32.5
250	200	150	150	9.0	8.4	33
300	150	350	370	9.6	7.8	50
300	200	250	250	9.6	8.4	49
300	250	150	150	9.6	9.0	47
350	200	360	370	10.2	8.4	62.5
350	250	260	260	10.2	9.0	61
350	300	160	160	10.2	9.6	61.5
400	200	460	/	10.8	8.4	78
400	250	360	380	10.8	9.0	76.5
400	300	260	260	10.8	9.6	77
400	350	160	155	10.8	10.2	73
450	250	460	/	11.4	9.0	94
450	300	360	/	11.4	9.6	94.5

(Unit:mm)

Nominal Diameter		L		e1	e2	Mass(kg)
DN	dn	Series A	Series B			
450	350	260	270	11.4	10.2	91
450	400	160	160	11.4	10.8	86.5
500	300	460	/	12.0	9.6	114
500	350	360	/	12.0	10.2	110
500	400	260	/	12.0	10.8	106
500	450	160	/	12.0	11.4	99
600	350	560	/	13.2	10.2	157
600	400	460	/	13.2	10.8	152
600	450	360	/	13.2	11.4	146
600	500	260	/	13.2	12.0	137
700	500	480	/	14.4	12.0	215
700	600	280	/	14.4	13.2	196
800	600	480	/	15.6	13.2	270
800	700	280	/	15.6	14.4	280
900	500	840	/	16.8	12.0	388
900	600	640	/	16.8	13.2	365
900	700	480	/	16.8	14.4	318
900	800	280	/	16.8	15.6	288
1000	800	480	/	18.0	15.6	392
1000	900	280	/	18.0	16.8	354
1100	800	670	/	19.2	15.6	537.9
1100	1000	280	/	19.2	18.0	456.9
1200	800	870	/	20.4	15.6	648
1200	1000	480	/	20.4	18.0	570

VTM D.I. Flanged Socket

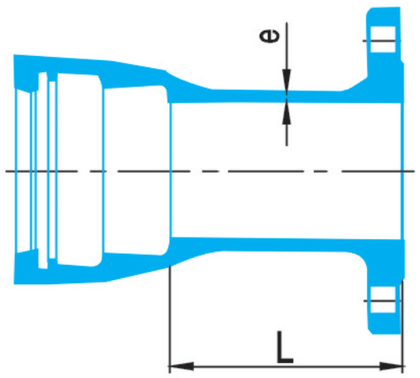

(Unit:mm)

Nominal Diameter	L		e	Mass(kg)
DN	Series A	Series B		PN 16
80	130	105	7.0	8.3
100	130	110	7.2	10.2
125	135	115	7.5	11.5
150	135	120	7.8	16.4
200	140	120	8.4	24
250	145	125	9.0	32
300	150	130	9.6	44
350	155	135	10.2	55.5
400	160	140	10.8	67.5
450	165	145	11.4	81.5
500	170	/	12.0	99.5
600	180	/	13.2	138
700	190	/	14.4	202
800	200	/	15.6	253
900	210	/	16.8	258
1000	220	/	18.0	324
1100	230	/	19.5	413.8
1200	240	/	20.4	521

VTM D.I. All Socket 45° Angle Branch

T-type

K=14

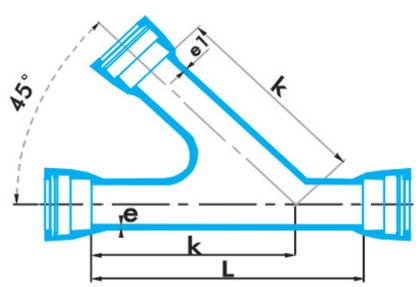

Type N

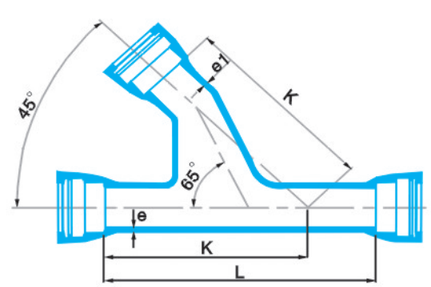

Type M

QINGDAO VALTECH MANUFACTURING CO.,LTD
青岛沃尔特机械有限公司

Dimensions in millimeters

Nominal Diameter		e	e1	Type	L	K	Mass(kg)
Body DN	Branch dn						
80	80	8.1	8.1	N	500	375	19
100	100	8.4	8.4	N	540	405	25
150	150	9.1	9.1	N	640	408	45
200	200	9.8	9.8	N	735	560	71
250	250	10.5	10.5	N	830	640	106
300	300	11.2	11.2	N	930	715	151
350	350	11.9	11.9	N	880	790	169
400	400	12.6	12.6	M	970	870	232
450	450	13.3	13.3	M	1060	950	302
500	500	14	14	M	1140	1025	388
600	600	15.4	15.4	M	1310	1180	525
700	700	16.8	16.8	M	1250	1280	667
800	800	18.2	18.2	M	1380	1410	919

VTM D.I. Double Socket Level Invert Tee

with Flanged Branch

T-type

K=14

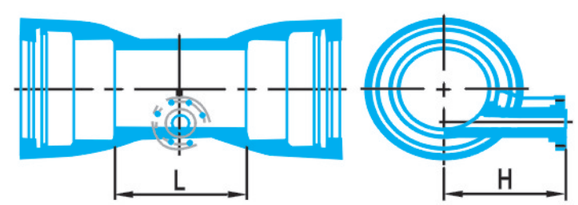

Dimensions in millimeters

Nominal Diameter		L	H	Mass(kg)
DN	dn			PN 16
200	80	245	250	39.5
250	80	250	275	49.5
300	80	255	300	62
350	100	280	325	83
400	100	280	350	97.5
450	100	285	375	115
500	100	290	400	134
600	100	295	450	173
600	150	295	450	179
700	150	360	500	296
800	150	365	550	360
800	200	360	540	364
900	150	370	600	467
1000	200	435	650	569
1100	200	440	700	725
1200	200	445	750	840

VTM Ductile Iron Fittings

Double Flanged 90° Bend (K=12)

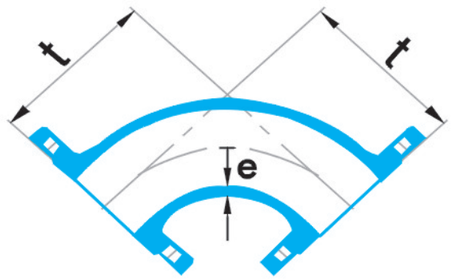

(Unit:mm)

Nominal Diameter DN	t A=B	e	Mass(kg) PN 16
80	165	7.0	9.6
100	180	7.2	12
125	200	7.5	15.6
150	220	7.8	20.5
200	260	8.4	31
250	350	9.0	49.5
300	400	9.6	70
350	450	10.2	96
400	500	10.8	127
450	550	11.4	163
500	600	12.0	211
600	700	13.2	325
700	800	14.4	423
800	900	15.6	571
900	1000	16.8	745
1000	1100	18.0	990
1100	1200	19.5	1234
1200	1300	20.4	1562

Double Flanged 45° Bend (K=12)

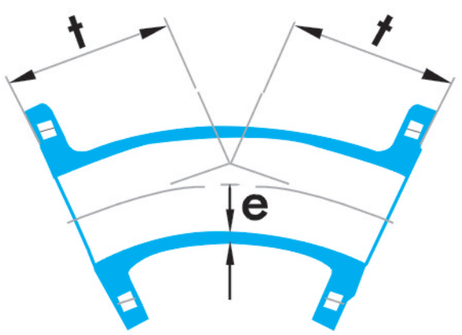

(Unit:mm)

Nominal Diameter DN	t Series A	t Series B	e	Mass(kg) PN 16
80	130	130	7.0	9.3
100	140	140	7.2	11.4
125	150	150	7.5	15.9
150	160	160	7.8	18.9
200	180	180	8.4	27.5
250	350	245	9.0	54.5
300	400	275	9.6	77
350	298	300	10.2	82.5
400	324	325	10.8	107
450	350	350	11.4	135
500	375	/	12.0	175
600	426	/	13.2	266
700	478	/	14.4	335
800	529	/	15.6	444
900	581	/	16.8	567
1000	632	/	18.0	751
1100	694	/	19.5	927
1200	750	/	20.4	1178

QINGDAO VALTECH MANUFACTURING CO.,LTD
青岛沃尔特机械有限公司

Double Flanged 22 1/2° Bend (K=12)

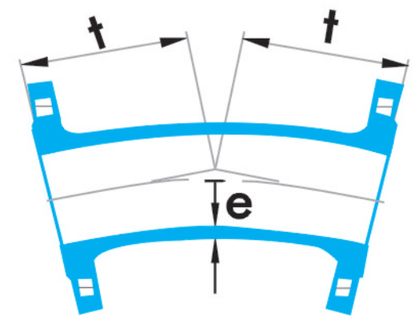

(Unit:mm)

Nominal Diameter DN	t Series A	t Series B	e	Mass(kg) PN 16
80	105	120	7.0	9.4
100	110	130	7.2	11.5
125	105	140	7.5	14.7
150	109	150	7.8	18.7
200	131	170	8.4	27.4
250	190	190	9.0	55.2
300	210	210	9.6	77.5
350	210	230	10.2	83.6
400	239	250	10.8	108.4
450	349	/	11.4	138
500	375	/	12.0	176.6
600	426	/	13.2	267.8
700	478	/	14.4	329.2
800	529	/	15.6	447
900	581	/	16.8	577.2
1000	632	/	18.0	760
1100	683	/	19.5	947
1200	735	/	20.4	1182.6

Double Flanged 11 1/4° Bend (K=12)

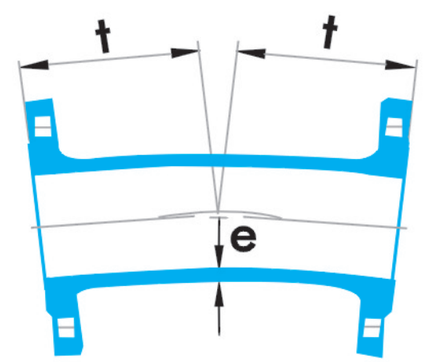

(Unit:mm)

Nominal Diameter DN	t Series A	t Series B	e	Mass(kg) PN 16
80	113	110	7.0	9.4
100	115	115	7.2	11.5
125	111	120	7.5	14.7
150	113	130	7.8	18.7
200	132	145	8.4	27.9
250	165	165	9.0	55.2
300	175	175	9.6	78
350	191	190	10.2	83.6
400	205	205	10.8	108.4
450	349	/	11.4	139
500	375	/	12.0	177.6
600	426	/	13.2	268.8
700	478	/	14.4	331.2
800	529	/	15.6	449
900	581	/	16.8	576.4
1000	632	/	18.0	764
1100	683	/	19.5	952
1200	735	/	20.4	1188.6

VTM D.I. All Flanged Tee (K=14)

T-type

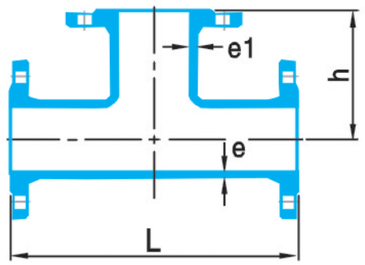

(Unit:mm)

Nominal Diameter		L		h		e	e1	Mass(kg)
DN	dn	Series A	Series B	Series A	Series B			PN 16
80	80	330	300	165	165	8.1	8.1	15.8
100	80	360	330	175	170	8.4	8.1	18.6
100	100	360	360	180	180	8.4	8.4	19.5
125	80	400	350	190	185	8.8	8.1	23
125	100	400	370	195	195	8.8	8.4	24
125	125	400	400	200	200	8.8	8.8	25.5
150	80	440	360	205	200	9.1	8.1	29
150	100	440	380	210	205	9.1	8.4	30
150	150	440	440	220	220	9.1	9.1	33.5
200	80	520	380	235	225	9.8	8.1	42.5
200	100	520	400	240	230	9.8	8.4	43.5
200	150	520	460	250	245	9.8	9.1	46.5
200	200	520	520	260	260	9.8	9.8	50.5
250	80	/	405	/	265	10.5	8.1	67
250	100	700	425	275	270	10.5	8.4	67.5
250	150	700	485	325	280	10.5	9.1	73.5
250	200	700	540	325	290	10.5	9.8	76
250	250	700	600	350	300	10.5	10.5	83
300	80	/	425	/	295	11.2	8.1	93
300	100	800	450	300	300	11.2	8.4	93.5
300	150	800	505	350	310	11.2	9.1	98.5
300	200	800	565	350	320	11.2	9.8	102
300	250	/	620	/	330	11.2	10.5	110
300	300	800	680	400	340	11.2	11.2	116
350	80	/	445	/	325	11.9	8.1	120
350	100	850	470	325	330	11.9	8.4	123
350	150	850	530	325	340	11.9	9.1	126
350	200	850	585	325	350	11.9	9.8	129
350	250	/	645	/	360	11.9	10.5	142
350	300	850	/	425	/	11.9	11.2	145
350	350	850	760	425	380	11.9	11.9	153
400	80	/	470	/	355	12.6	8.1	154
400	100	900	490	350	360	12.6	8.4	155
400	150	900	550	350	370	12.6	9.1	158
400	200	900	610	350	380	12.6	9.8	161
400	250	/	665	/	390	12.6	10.5	175

(Unit:mm)

Nominal Diameter		L		h		e	e1	Mass(kg)
DN	dn	Series A	Series B	Series A	Series B			PN 16
400	300	900	725	450	400	12.6	11.2	177
400	400	900	840	450	420	12.6	12.6	193
450	100	950	515	375	390	13.3	8.4	193
450	150	950	570	375	400	13.3	9.1	196
450	200	950	630	375	410	13.3	9.8	199
450	250	/	690	/	420	13.3	10.5	213
450	300	950	745	475	430	13.3	11.2	215
450	400	950	860	475	450	13.3	12.6	230
450	450	950	920	475	460	13.3	13.3	240
500	100	1000	535	400	420	14.0	8.4	242
500	150	1000	/	400	/	14.0	9.1	245
500	200	1000	650	400	440	14.0	9.8	248
500	300	1000	/	500	/	14.0	11.2	264
500	400	1000	885	500	480	14.0	12.6	279
500	500	1000	1000	500	500	14.0	14.0	301
600	150	1100	/	450	/	15.4	9.1	356
600	200	1100	700	450	500	15.4	9.8	359
600	300	1100	/	550	/	15.4	11.2	375
600	400	1100	930	550	540	15.4	12.6	390
600	600	1100	1165	550	580	15.4	15.4	483
700	150	600	/	525	/	16.8	9.1	283
700	200	650	/	525	/	16.8	9.8	299
700	300	760	/	540	/	16.8	11.2	342
700	400	870	/	555	/	16.8	12.6	379
700	600	1200	/	585	/	16.8	15.4	523
700	700	1200	/	600	/	16.8	16.8	548
800	200	690	/	585	/	18.2	9.8	384
800	300	800	/	600	/	18.2	11.2	443
800	400	910	/	615	/	18.2	12.6	478
800	600	1350	/	645	/	18.2	15.4	699
800	800	1350	/	675	/	18.2	18.2	741
900	200	730	/	645	/	19.6	9.8	484
900	400	950	/	675	/	19.6	12.6	594
900	600	1500	/	705	/	19.6	15.4	860
900	800	1500	/	735	/	19.6	18.2	913
900	900	1500	/	750	/	19.6	19.6	924
1000	200	770	/	705	/	21.0	9.8	629
1000	400	990	/	735	/	21.0	12.6	755
1000	600	1650	/	765	/	21.0	15.4	1116
1000	800	1650	/	795	/	21.0	18.2	1168
1000	1000	1650	/	825	/	21.0	21.0	1229
1100	400	980	/	795	/	22.4	12.6	913
1100	600	1210	/	825	/	22.4	15.4	1083
1100	800	1470	/	855	/	22.4	18.2	1245
1100	1000	1690	/	885	/	22.4	21.0	1450
1100	1100	1800	/	900	/	22.4	22.4	1555
1200	400	1070	/	855	/	23.8	12.6	1122
1200	600	1240	/	885	/	23.8	15.4	1256
1200	800	1470	/	915	/	23.8	18.2	1439
1200	1000	1700	/	945	/	23.8	21.0	1664
1200	1200	1950	/	975	/	23.8	23.8	1970

QINGDAO VALTECH MANUFACTURING CO.,LTD
青岛沃尔特机械有限公司

VTM D.I. Double Flanged Concenric

Taper

K=12

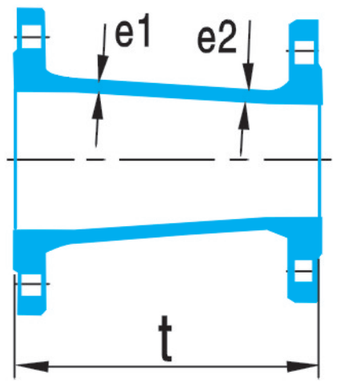

VTM D.I. Double Flanged Flat

Taper

K=12

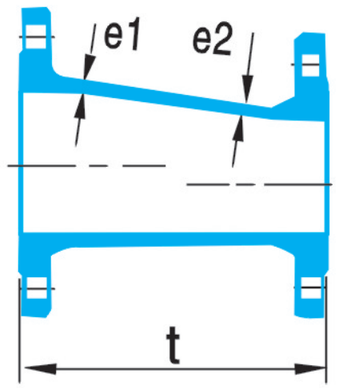

(Unit:mm)

Nominal Diameter		t		e	e1	Mass(kg)
DN	dn	Series A	Series B			
80	50	190	/	7.0	7.0	8.2
100	50	300	/	7.2	7.0	11.2
100	80	200	195	7.2	7.0	9.4
125	100	200	185	7.5	7.2	11.3
150	80	400	/	7.8	7.0	16.4
150	100	300	/	7.8	7.2	15.3
150	125	200	190	7.8	7.5	14
200	80	650	/	8.4	7.2	28.5
200	100	600	/	8.4	7.5	27.5
200	150	300	235	8.4	7.8	22
250	150	600	/	9.0	7.8	39
250	200	300	250	9.0	8.4	30.5
300	80	750	/	9.6	7.0	50.5
300	100	700	/	9.6	7.2	49
300	150	650	/	9.6	7.8	48.5
300	200	600	/	9.6	8.4	51.5
300	250	300	265	9.6	9.0	40
350	200	650	/	10.2	8.4	64
350	250	600	/	10.2	9.0	67.5
350	300	300	290	10.2	9.6	52.5
400	200	700	/	10.8	8.4	77.5
400	250	650	/	10.8	9.0	81.5
400	300	300	/	10.8	9.6	85
400	350	300	305	10.8	10.2	67
450	200	750	/	11.4	8.4	97
450	250	700	/	11.4	9.0	97
450	300	650	/	11.4	9.6	101
450	350	600	/	11.4	10.2	106
450	400	300	320	11.4	10.8	83
500	250	750	/	12.0	9.0	122
500	300	700	/	12.0	9.6	122
500	350	650	/	12.0	10.2	127
500	400	600	/	12.0	10.8	131
500	450	300	/	12.0	11.4	104
600	350	750	/	13.2	10.2	174
600	400	700	/	13.2	10.8	178
600	450	650	/	13.2	11.4	183
600	500	600	/	13.2	12.0	191
700	400	800	/	14.4	10.8	212
700	450	750	/	14.4	11.4	213
700	500	700	/	14.4	12.0	208
700	600	600	/	14.4	13.2	243
800	450	900	/	15.6	11.4	286
800	500	800	/	15.6	12.0	285

VTM D.I. Double Flanged Concenric Taper

K=12

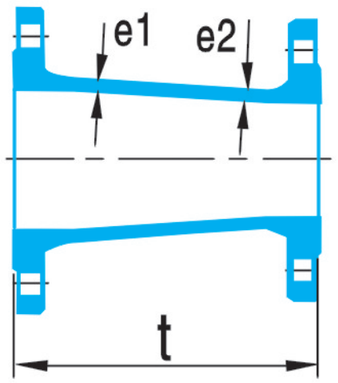

(Unit:mm)

Nominal Diameter DN	dn	t Series A	t Series B	e	e1	Mass(kg)
800	600	700	/	15.6	13.2	275
800	700	600	/	15.6	14.4	295
900	500	1000	/	16.8	12.0	370
900	600	800	/	16.8	13.2	360
900	700	700	/	16.8	14.4	352
900	800	600	/	16.8	15.6	352
1000	600	1000	/	18.0	13.2	490
1000	700	800	/	18.0	14.4	112
1000	800	700	/	18.0	15.6	448
1000	900	600	/	18.0	16.8	438
1100	700	1000	/	19.2	14.4	562
1100	800	800	/	19.2	15.6	532
1100	900	700	/	19.2	16.8	530
1100	1000	600	/	19.2	18.0	543
1200	700	1315	/	20.4	14.4	777
1200	800	1160	/	20.4	15.6	758
1200	900	975	/	20.4	16.8	726
1200	1000	790	/	20.4	18.0	692
1200	1100	605	/	20.4	19.2	655

VTM D.I. Double Flanged Flat Taper

K=12

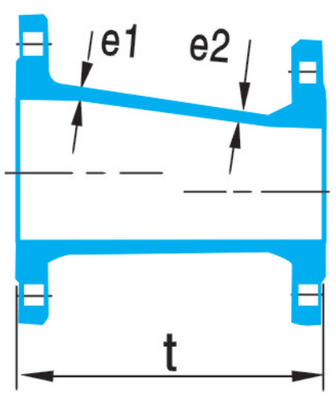

QINGDAO VALTECH MANUFACTURING CO.,LTD
青岛沃尔特机械有限公司

VTM D.I. Double Flanged 90° Duckfoot Bend (K=12)

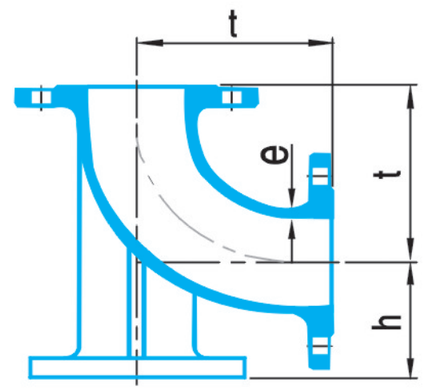

(Unit:mm)

Nominal Diameter DN	e	t	h	Mass(kg) PN 16
80	7.0	165	110	14.8
100	7.2	180	125	18.2
125	7.5	200	140	23.5
150	7.8	220	160	31.5
200	8.4	250	190	48.5
250	9.0	350	225	77.5
300	9.6	400	255	111
350	10.2	450	290	153
400	10.8	500	320	201
450	11.4	550	350	261
500	12.0	600	385	336
600	13.2	700	450	520
700	14.4	800	515	708
800	15.6	900	580	974
900	16.8	1000	645	1290
1000	18.0	1100	710	1698
1100	19.5	1200	775	2150
1200	20.4	1300	840	2709

VTM D.I. Flanged Bell Mouth (K=12)

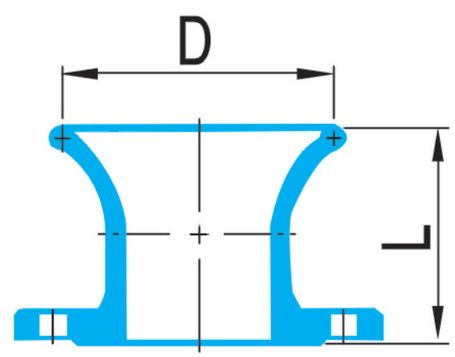

(Unit:mm)

Nominal Diameter DN	D	L	Mass(kg) PN 16
80	150	130	5.2
100	175	135	6.2
150	230	150	10.1
200	290	170	14.8
250	345	183	20.5
300	405	205	28.5
350	460	220	38
400	520	240	49.5
450	575	255	62
500	635	275	80
600	750	310	120
700	865	345	146
800	980	380	197
900	1095	415	250
1000	1210	450	331
1100	1325	485	405
1200	1440	520	512

VTM D.I. Flanged Spigot (K=12)

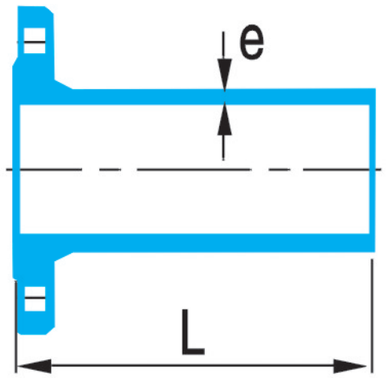

(Unit:mm)

Nominal Diameter DN	L	e	Mass(kg) PN 16
80	350	7.0	7.8
100	360	7.2	9.7
125	370	7.5	12.4
150	380	7.8	15.8
200	400	8.4	23
250	420	9.0	32
300	440	9.6	42
350	460	10.2	55.5
400	480	10.8	70
450	500	11.4	87
500	520	12.0	110
600	560	13.2	159
700	600	14.4	206
800	600	15.6	254
900	600	16.8	295
1000	600	18.0	369
1100	600	19.5	430
1200	600	20.4	520

VTM D.I. Blank Flange (K=12)

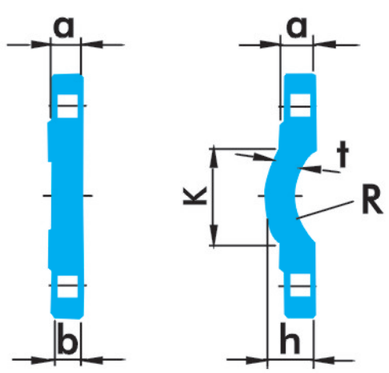

(Unit:mm)

Nominal Diameter DN	a	b or t	K and R	h	Mass(kg) PN 16
50	19	16	/	/	3.2
65	19	16	/	/	3.5
80	19	16	/	/	3.9
100	19	16	/	/	4.8
125	19	16	/	/	5.6
150	19	16	/	/	8.1
200	20	17	/	/	11.4
250	22	19	/	/	16.6
300	24.5	20.5	/	/	23.5
350	26.5	22.5	325	71	34.5
400	28	24	375	80	46
450	30	26	425	88	60
500	31.5	27.5	475	97	79.5
600	36	31	575	114	125
700	39.5	34.5	675	131	163
800	43	38	775	148	228

QINGDAO VALTECH MANUFACTURING CO.,LTD
青岛沃尔特机械有限公司

VTM D.I. Double Flanged 90° Long Radius Bend (K=12)

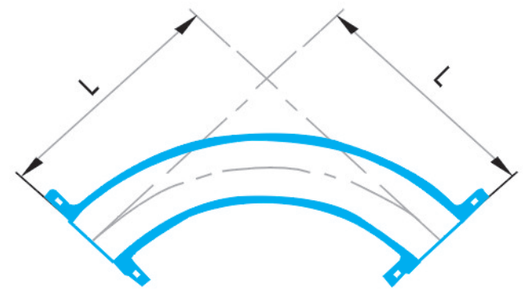

(Unit:mm)

Nominal Diameter DN	L	Mass(kg) PN 16
80	380	14.5
100	400	18.0
125	425	23.5
150	450	30.5
200	500	46.0
250	550	66.0
300	600	90.5
350	650	122
400	700	158
450	750	200
500	800	254
600	900	379
700	1000	484.2
800	1100	655
900	1200	846.4
1000	1300	1108
1100	1400	1385
1200	1500	1721.6

VTM D.I. K-Collar (K=12)

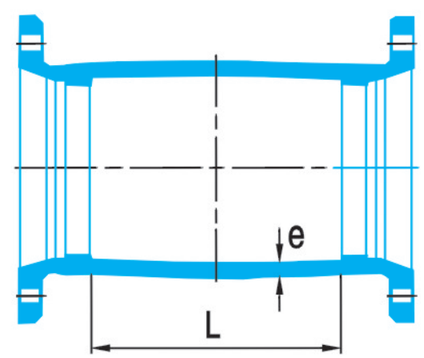

(Unit:mm)

Nominal Diameter DN	L	e	Mass(kg) PN 16
80	160	7.0	12.9
100	160	7.2	15.8
125	165	7.5	19.7
150	165	7.8	23.5
200	170	8.4	30
250	175	9.0	38.5
300	180	9.6	54
350	185	10.2	67.5
400	190	10.8	81
450	195	11.4	96
500	200	12.0	109
600	210	13.2	140
700	220	14.4	185
800	230	15.6	225
900	240	16.8	278
1000	250	18.0	348
1100	260	19.5	407
1200	270	20.4	472

VTM D.I. All Flanged Radial Tee (K=14)

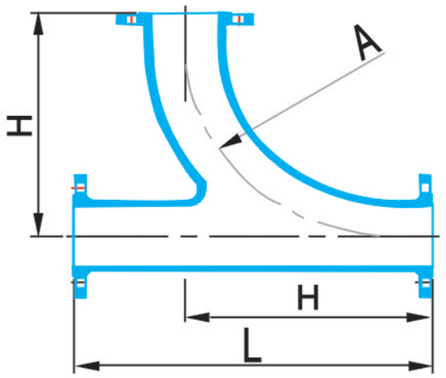

(Unit:mm)

Nominal Diameter		L	H	A	Mass(kg)
DN	dn				PN 16
80	80	545	380	330	23
100	100	580	400	340	30
150	150	670	450	385	49
200	200	760	500	430	73
250	250	900	550	475	108
300	300	1000	600	515	146
350	350	1100	650	560	204
400	400	1200	700	605	258
450	450	1300	750	650	329
500	500	1400	800	690	418
600	600	1600	900	780	635

VTM D.I. Flanged 45° Angle Branch

(K=14)

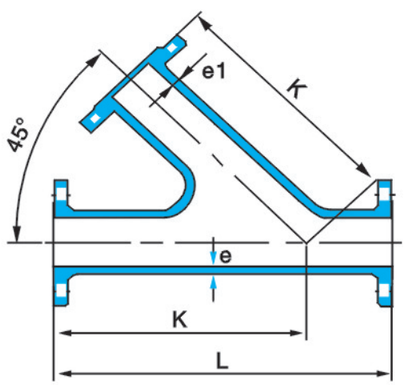

Type N

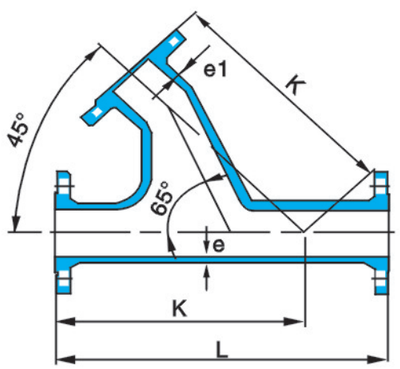

Type M

QINGDAO VALTECH MANUFACTURING CO.,LTD
青岛沃尔特机械有限公司

Dimensions in millimeters

Nominal Diameter		Type	e	e1	L	K	Mass(kg)
Body DN	Branch dn						
80	80	N	8.1	8.1	500	375	23
100	100	N	8.4	8.4	540	405	27
150	150	N	9.1	9.1	640	480	47
200	200	N	9.8	9.8	735	560	71
250	250	N	10.5	10.5	830	640	105
300	300	N	11.2	11.2	930	715	147
350	350	M	11.9	11.9	880	790	168
400	400	M	12.6	12.6	970	870	220
450	450	M	13.3	13.3	1060	950	282
500	500	M	14	14	1140	1025	365
600	600	M	15.4	15.4	1310	1180	550
700	700	M	16.8	16.8	1550	1430	832
800	800	M	18.2	18.2	1700	1570	1135

VTM D.I. All Flanged Level Invert Tee (K=14)

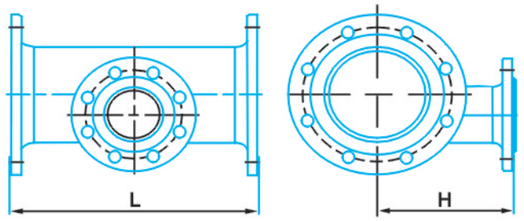

(Unit:mm)

Nominal Diameter		L	H	Mass(kg)
DN	dn			PN 16
150	80	400	220	30
150	100	400	220	33.5
200	80	520	250	43
200	100	520	250	44
250	80	700	275	66
250	100	700	275	69
250	150	700	275	77
300	80	800	305	94
300	100	800	305	96
300	150	800	305	99
350	100	850	340	125
350	150	850	340	128

(Unit:mm)

Nominal Diameter		L	H	Mass(kg)
DN	dn			PN 16
400	100	900	365	156
400	150	900	365	162
450	100	950	380	189
450	150	950	380	197
500	150	1000	400	248
600	150	1100	450	360
600	200	1100	450	370
700	150	600	500	262
700	200	650	500	268
800	150	670	540	379
800	200	690	540	388

Double Socket 90° Bend For PVC Pipe

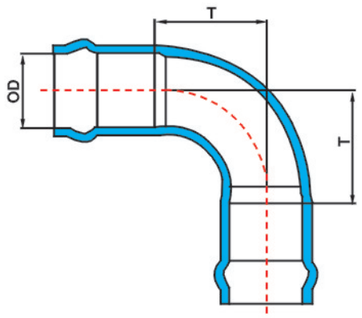

Nominal Diameter		T	Mass
OD	DN		Kg
63	50	65	3.6
75	65	70	4.7
90	80	75	7.2
110	100	85	8.8
125	125	110	10.4
140	125	110	12.4
160	150	130	18.1
200	200	160	24.5
225	200	160	33.1
250	250	185	42.4
315	300	215	66

Double Socket 45° Bend For PVC Pipe

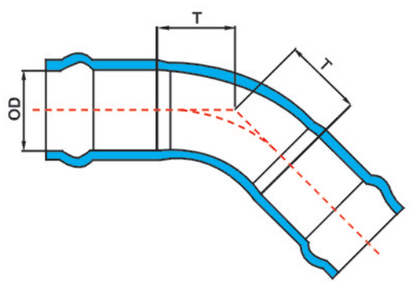

Nominal Diameter		T	Mass
OD	DN		Kg
63	50	40	3.3
75	65	40	4.3
90	80	50	5.1
110	100	60	6.2
125	125	65	9.7
140	125	65	11
160	150	70	14.7
200	200	70	18.6
225	200	80	30
250	250	110	33.1
315	300	135	58
400	400	175	65

Double Socket 22.5° Bend For PVC Pipe

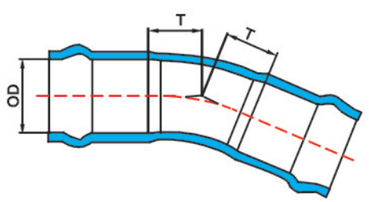

Nominal Diameter		T	Mass
OD	DN		Kg
63	50	20	2.9
75	65	25	3.9
90	80	25	4.5
110	100	30	6.6
125	125	30	7.6
140	125	30	9
160	150	35	11
200	200	40	17.1
225	200	45	17.3
250	250	50	28
315	300	85	44
400	400	110	55

QINGDAO VALTECH MANUFACTURING CO.,LTD
青岛沃尔特机械有限公司

Double Socket 11.25° Bend For PVC Pipe

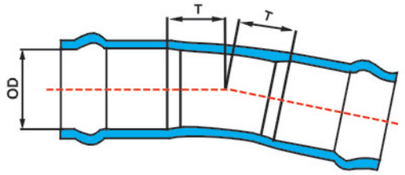

Nominal Diameter		T	Mass
OD	DN		Kg
63	50	20	2.9
75	65	25	3.9
90	80	25	4.4
110	100	30	5.5
125	125	30	7.6
140	125	30	9
160	150	30	10.3
200	200	30	16
225	200	40	23
250	250	40	28
315	300	55	44
400	400	65	55

ALL Socket Tee For PVC Pipe

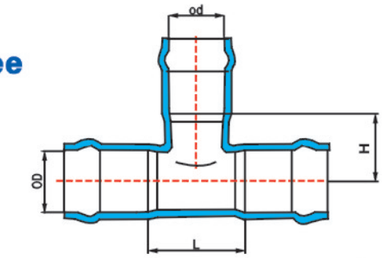

Nominal Diameter		L	H	Mass
OD	od			Kg
50	40	60	30	4.6
63	63	70	30	4.5
75	63	70	45	5.5
	75	85	45	5.8
90	63	75	50	6
	75	90	50	7.1
	90	105	50	8.2
110	63	75	60	8.3
	75	90	60	8.4
	90	105	60	9.7
	110	125	60	11.8
125	63	75	70	9
	75	90	70	9.5
	90	105	70	10.2
	110	125	70	10.8
	125	150	70	13.2
140	63	75	75	9.7
	75	90	75	10.4
	90	105	75	11
	110	125	75	11.8
	125	150	75	12.7
	140	150	75	13.3
160	63	75	85	13.1
	75	90	85	13.9
	90	105	85	15
160	110	125	85	19.3
	125	125	85	19.8
	140	150	85	21
	160	175	85	22.7
	110	125	95	17.2

Nominal Diameter		L	H	Mass
OD	od			Kg
180	160	175	95	20.4
	180	190	95	21
200	90	140	105	17.2
	110	160	105	21.9
	125	160	105	23.5
	140	185	105	24.7
	160	210	105	26.3
	180	230	105	30.5
	200	240	105	33.2
225	90	140	120	21.8
	110	160	120	24.3
	160	210	120	26.6
	200	240	120	29.6
	225	260	120	30.6
250	90	155	130	27.3
	110	175	130	30.7
	160	225	130	34.1
	200	250	130	39.6
	250	300	130	41.8
280	90	155	145	31.5
	110	175	145	33
	160	225	145	37
	200	250	145	39.2
	250	300	145	43.2
	280	325	145	47.5
315	110	175	165	42.2
	160	225	165	53.2
	200	250	165	56.3
	250	300	165	59.4
	280	325	165	62.7
	315	375	165	70.73

Double Socket with Flange Branch For PVC Pipe

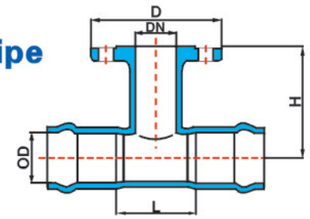

Nominal Diameter		L	H	Mass
OD	od			Kg
50	40	60	130	4.6
63	40	70	140	5.3
	50	70	140	6.1
	60	70	140	6.2
75	40	60	130	6.2
	50	70	140	7.1
	60	85	140	8.8
	65	85	140	8
90	40	65	135	7.2
	50	75	145	8
	60	90	155	10.8
	65	90	155	9
	80	105	160	12.4
110	40	65	145	8.5
	50	75	145	9.2
	60	90	165	11.5
	65	90	165	10.4
	80	105	170	13.4
	100	125	170	15.3
125	40	65	160	9.8
	60	90	160	11.2
	80	105	170	12.5
	100	125	180	14
	125	150	180	16
140	40	65	160	10.5
	60	90	180	12.2
	65	90	180	13
	80	105	185	13
	100	125	195	14.8
	125	150	200	17.5
160	40	65	170	12.8
	50	75	170	13.6
	60	90	190	18
	65	90	190	15
	80	105	200	19.5
	100	125	205	20.4
	125	150	210	20.5
	150	175	220	24
180	60	90	215	17.3
	100	125	230	20.5
	150	175	245	26
	200	220	250	29.7

Nominal Diameter		L	H	Mass
OD	od			Kg
200	50	110	195	17.5
	60	125	215	25
	80	140	225	27
	100	160	230	32
	125	185	240	24.5
	150	210	245	35
	200	260	250	34
225	60	125	215	29
	80	140	225	32
	100	160	230	34
	125	185	240	26.7
	150	210	245	36
	200	260	260	43
250	60	140	250	37
	80	155	250	39
	100	175	255	41
	150	225	265	55
	200	275	275	59
	250	325	285	64
280	80	155	265	33.4
	100	175	270	35.5
	150	225	280	42
	200	275	280	46.5
	250	325	290	55
315	60	140	290	54
	80	155	295	57
	100	175	300	62
	150	225	310	67
	200	275	310	70
	250	325	310	74
	300	375	310	78
400	80	175	340	57
	100	210	355	59
	150	275	360	63
	200	325	365	70
	250	370	375	78
	300	420	285	86
	400	520	395	105

QINGDAO VALTECH MANUFACTURING CO.,LTD
青岛沃尔特机械有限公司

Double Socket Taper For PVC Pipe

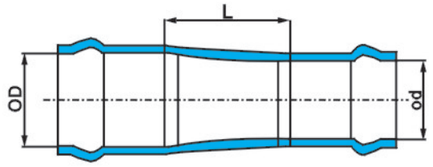

Nominal Diameter		L	Mass
OD	od		Kg
63	50	20	3.2
75	63	20	3.6
90	50	30	3.7
	63	25	3.9
	75	20	4.6
110	63	30	4.5
	75	25	4.8
	90	20	5.3
125	75	55	5.8
	90	45	6.2
	110	40	6.9
140	90	45	7
	110	40	7.2
	125	40	7.5
160	90	55	9
	110	50	9.4
	125	40	9.7
	140	40	9

Nominal Diameter		L	Mass
OD	od		Kg
180	140	65	10.9
	160	60	11.5
200	90	95	10.2
	110	85	14
	140	70	11.5
	160	70	18
	180	60	13.2
225	140	75	13
	160	70	13
	200	60	17.6
250	160	90	23
	200	80	24
280	160	100	20.5
	250	60	25.2
315	200	105	31
	250	90	41
400	250	200	38
	315	160	40

Flange Socket For PVC Pipe

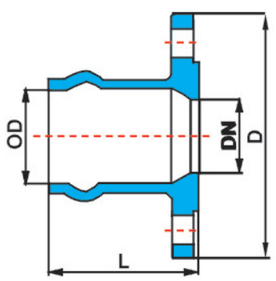

Nominal Diameter		D	L	Mass
OD	od			Kg
63	50	165	100	3.7
75	65	185	100	4.2
90	80	200	120	5.4
110	100	220	130	6.3
125	125	250	135	9.4
140	125	250	135	12.6
160	150	285	155	13.2
200	200	340	195	18.1
225	200	340	195	19.0
250	250	400	210	28.6
280	250	400	230	31.0
315	300	455	240	35.0
400	400	580	250	55.0

Flange Spigot For PVC Pipe

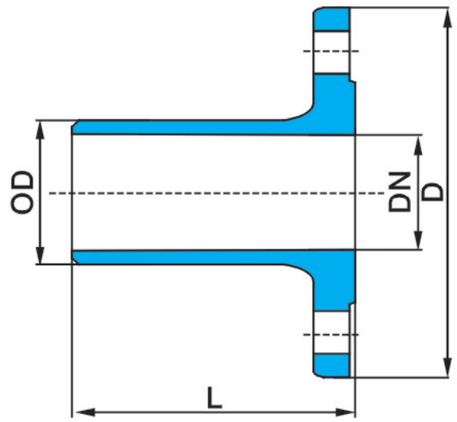

Nominal Diameter		D	L	Mass
OD	DN			Kg
63	50	165	125	3.5
75	65	185	150	4
90	80	200	135	6
110	100	220	145	6.9
125	125	250	135	8.7
140	125	250	135	8.9
160	150	285	175	11.8
200	200	340	195	17.5
225	200	340	195	18.3
250	250	400	230	32.5
280	250	400	245	29.2
315	300	455	275	35.5
400	400	580	250	50

Cap For PVC Pipe

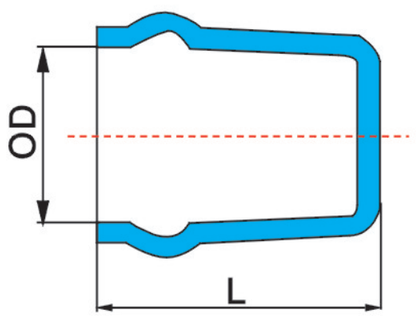

Nominal Diameter		L	Mass
OD	DN		Kg
50	50	90	1.2
63	50	100	2.0
75	65	100	2.3
90	80	120	3.6
110	100	130	5.0
125	125	135	6.0
140	125	135	7.5
160	150	155	9.5
200	200	195	12.0
225	200	195	14.5
250	250	210	18.0
280	250	225	21.0
315	300	240	29.0
400	400	250	40.0

QINGDAO VALTECH MANUFACTURING CO.,LTD
青岛沃尔特机械有限公司

Loose Flange

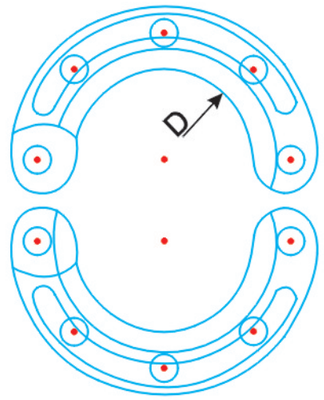

Nominal Diameter	Mass
DN	Kg
40	0.7
50	0.83
60	0.95
65	1.3
80	1.5
100	1.8
125	1.7
150	2.4
200	3
250	4.5
300	6
400	7.23

Double Socket Collar For UPVC Pipe

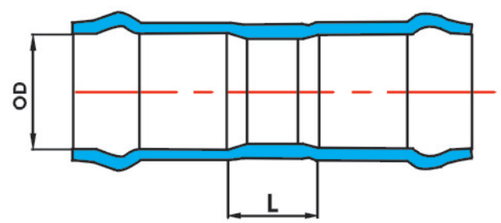

Nominal Diameter		L	Mass
OD	DN		Kg
63	50	60	2.8
75	65	70	3.2
90	80	75	4.5
110	100	75	6
125	125	75	8
140	125	75	10.2
160	150	75	11
200	200	70	16
225	200	70	17.5
250	250	70	25.2
280	250	70	30
315	300	70	38

FLANGE ADAPTOR For PVC Pipe

NO.	PART NAME
①	SLEEVE
②	PIPE
③	GLAND
④	RUBBER GASKET
⑤	STUD

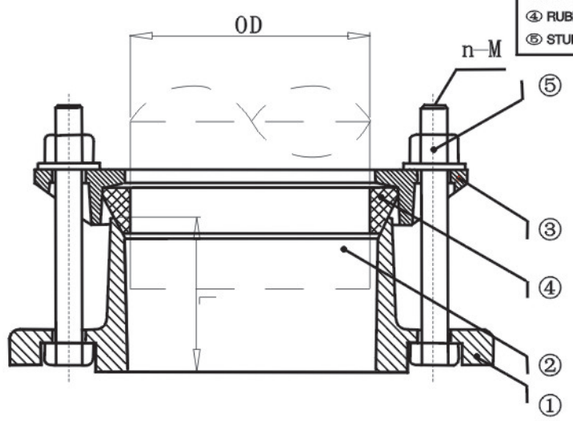

Bolts & Nuts	Zinc-plated	BS 729:1970,ISO 1461
	Hot Dip Galvanized or stainless steel	
Sleeve	Ductile Iron	BS 2789:1985,Grade 420/12
Gland	Ductile Iron	BS 2789:1985,Grade 420/12
Rubber Gasket	SBR,EPDM or other	BS 2494:1990,Type W
Coating	Fusion Bonded Epoxy or Wpoxy Coat	Minimum 250 μm thick

Dimension in mm

DN	OD	n	M	L	FLANGE
50	63	4	M12	65	PN10+PN16+BS10/E
65	75	4	M12	65	PN10+PN16+BS10/E
80	90	4	M12	65	PN10+PN16+BS10/E
100	110	4	M12	70	PN10+PN16+BS10/E
125	125	4	M12	70	PN10+PN16+BS10/E
125	140	4	M12	70	PN10+PN16+BS10/E
150	160	4	M12	70	PN10+PN16+BS10/E
150	180	4	M12	75	PN10+PN16+BS10/E
200	200	4	M12	75	PN10+PN16+BS10/E
200	225	4	M12	75	PN10+PN16+BS10/E
250	250	6	M12	75	PN10+PN16+BS10/E
250	280	6	M12	90	PN10+PN16+BS10/E
300	315	6	M12	90	PN10+PN16+BS10/E

QINGDAO VALTECH MANUFACTURING CO.,LTD
青岛沃尔特机械有限公司

Coupling For PVC Pipe

NO.	PART NAME
①	PIPE
②	GI AND
③	SLEEVE
④	RUBBER GASKET
⑤	BOLTS AND NUTS

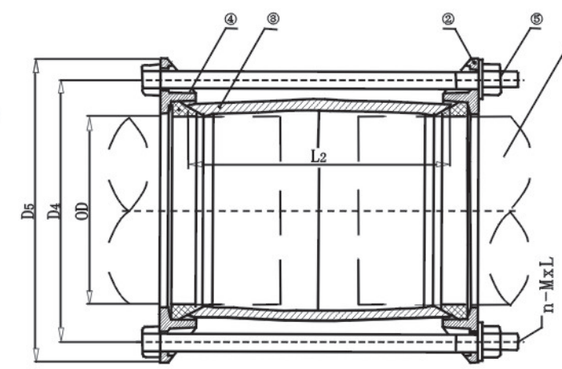

Bolts & Nuts	Zinc-plated	BS 729:1971,ISO 1461
	Hot Dip Galvanized or stainless steel	
Sleeve	Ductile Iron	BS 2789:1985,Grade 420/12
Gland	Ductile Iron	BS 2789:1985,Grade 420/12
Rubber Gasket	SBR,EPDM or other	BS 2494:1990,Type W
Coating	Fusion Bonded Epoxy or Wet Epoxy Coat	Minimum 250 μm thick

Dimension in mm

DN	OD	D4	D5	L2	M	N	L
50	63	114	144	100	M12	4	170
65	75	126	156	100	M12	4	170
80	90	142	172	100	M12	4	170
100	110	166	196	100	M12	4	170
125	125	180	210	100	M12	4	170
125	140	196	226	100	M12	4	170
150	160	217	247	100	M12	4	170
150	180	237	267	100	M12	4	170
200	200	257	287	100	M12	4	170
200	225	282	372	100	M12	4	170
250	250	307	337	100	M12	6	170
250	280	338	368	100	M12	6	170
300	315	373	403	100	M12	6	170